Power supply with solar panel (PULSIA station)

MAIN SUPPLY

Item : 003378

Main features:

- Power supply of the station
- Mains supply
- Relay by battery and solar panel
- Waterproof and robust

The power supply allows to provide the energy necessary to power a PULSIA weather station. As the only means of energy supply or combined with a solar generator, it can meet the energy needs of the entire station when the solar contribution is not sufficient or when a sensor requires a heating system to prevent freezing or fogging.

The mains power supply enables the reliable energy provision to a PULSIA weather station and its optional components, including sensor heaters. This configuration delivers an output of 6V and 400mA.

Robust

The equipment is effectively shielded from environmental factors by a double IP66-rated enclosure, ensuring robustness and durability.

Solar panel

The power supply also features a 10W polycrystalline solar panel that can be tilted from 15 to 75 degrees, accompanied by a 24Ah battery, allowing the station to operate even in the absence of mains power.

A solar charge controller efficiently recharges the 12V 6A battery, while the entire configuration benefits from protection through a lightning arrester and circuit breaker.

Easy to install

Designed for ease of use, the power supply comes pre-wired, allowing for quick and hassle-free attachment to the PULSIA T-shaped structure using the provided fixing clamps. This seamless integration facilitates a streamlined and efficient deployment of the weather station, ensuring uninterrupted energy supply!

DIN rail power supply 24V DC 20A

Output

Number of output	1
Output voltage (DC)	24 V
Output current	20 A
Power supply	480 W
Undulation and noise	150 mV Pk-Pk
Tolerance in tension	± 1 %
Line regulation	± 0.5 %
Load regulation	± 1%

Input

Volatage range	90 ~ 264 V c.a.
Frequency range	47 ~ 63 Hz
Efficiency	92.5%

Protection

Overload	105 ~130% of rated output power Type: continuous current limitation, power off after 3 sec.
Over voltage	29 ~ 33 V Type: Output voltage off, restart
Overheating	Output voltage off, recovery after temperature drop

Environment

Operating temperature	-20 ~ +70°C
Moisture	-20 ~ 95 % HR without condensation
Storage temperature/ humidity	-40 ~ +85 °C, 10 ~ 95% HR

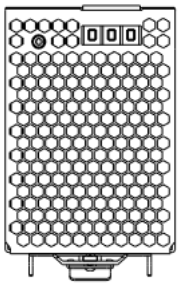
Bottom View

Terminal Pin No. Assignment (TB1)

Pin No.	Assignment
1	FG ⏚
2	AC/N or DC -
3	AC/L or DC +

Terminal Pin No. Assignment (TB2)

Pin No.	Assignment
1,2	DC OUTPUT +V
3,4	DC OUTPUT-V

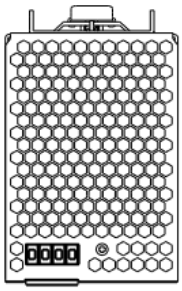
Top View

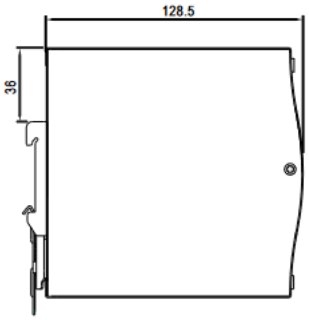

Side View

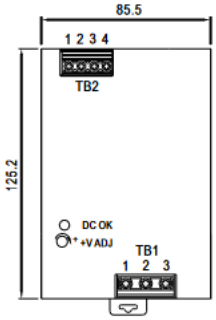

Front View

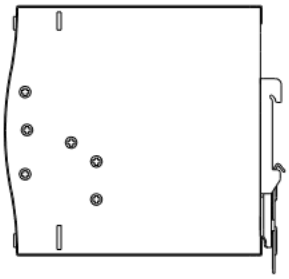
Side View

WWW.PULSONIC.COM

Copyright © Jun-23 PULSONIC
This document is intended to be as accurate as possible. However, PULSONIC accepts no responsibility for inaccurate, incomplete or outdated information. Its contents are subject to change without notice.

PULSONIC
48, rue de Versailles 91400 Orsay France
Tel : +33 1 64 46 34 10 | Fax : +33 1 64 46 25 22
Email : info@pulsonic.com | www.pulsonic.com
SAS with a capital of 70000€ | RCS : Evry B 329 221 980

Solar charge controller

Performance characteristics

System voltage	12 V
Consumption	< 4 mA

Input

No-load voltage of the PV panel	< 47 V
Panel current	6 A

Output

Consumer current	6 A
Reclosing reference point (LVR)	12,4 to 12,7 V
Deep discharge protection (LVD)	11,2 V

Battery

Final charge voltage	13,9 V
Quick charge voltage	14,4 V
Setting the battery type	Gel

Environment

Ambient temperature	-25 to + 50°C

Other

Terminal block (fine wire / single wire)	4 mm² / 6 mm² -
Level of protection	IP 31
Dimensions (X x Y x Z)	145 x 100 x 30 mm
Weight	Ca. 150 g

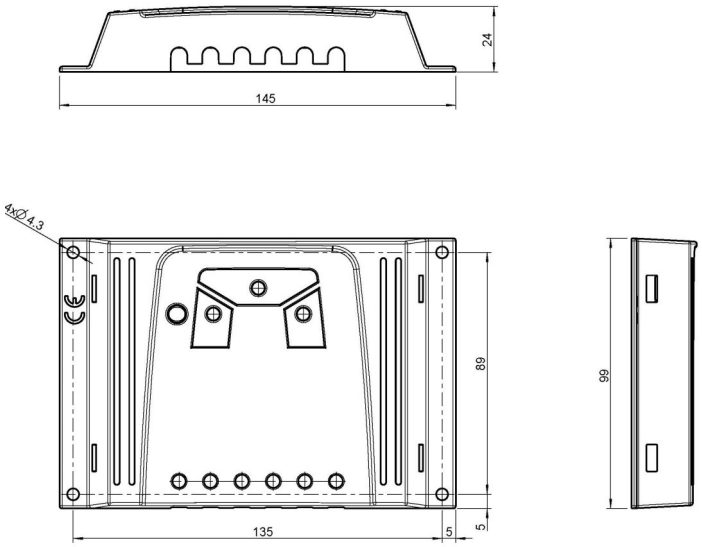

Copyright © Jun-23 PULSONIC
This document is intended to be as accurate as possible. However, PULSONIC accepts no responsibility for inaccurate, incomplete or outdated information. Its contents are subject to change without notice.

WWW.PULSONIC.COM

PULSONIC
48, rue de Versailles 91400 Orsay France
Tel : +33 1 64 46 34 10 | Fax : +33 1 64 46 25 22
Email : info@pulsonic.com | www.pulsonic.com
SAS with a capital of 70000€ | RCS : Evry B 329 221 980

Lightning arrestor

Main characteristics

Imax	12 kA
Icc	4,5 kA

Other

Form of the TT network	Yes
Number of conductors (without grounding)	2
Rated discharge current (8/20)	10 kA
Rated voltage AC	230 V
Highest DC voltage AC	275 V

Protection

Level of protection	1,2 kV
Level of L-N protection	1 kV
Integrated auxiliary fuse	Yes

Environment

Ambient temperature	-10 to + 40°C

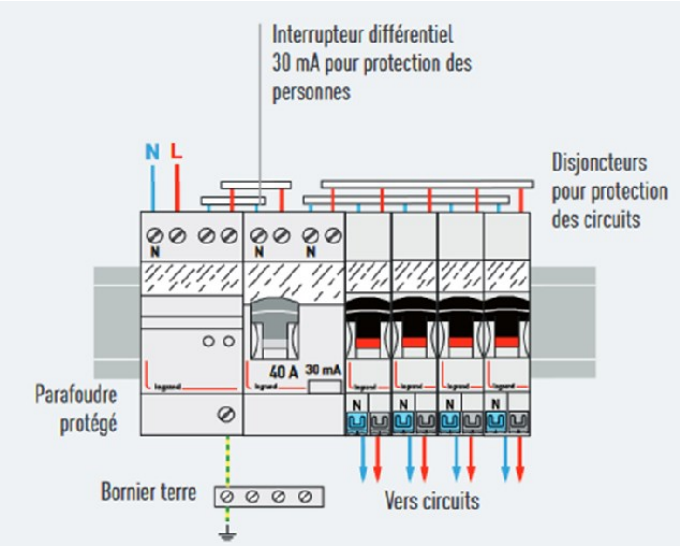

Battery

Features

Technology	Waterproof gel VRLA
Voltage	12V
Capacity	24 Ah
Polarity	Right
Time of use without recharging	10 days
Length (mm)	166
Width (mm)	175
Height (mm)	125
Weight (kg)	9,6

Other

450 cycles according to IEC 60254-1
Low self-discharge rate
Very high intrinsic safety

WWW.PULSONIC.COM

Copyright © Jun-23 PULSONIC
This document is intended to be as accurate as possible. However, PULSONIC accepts no responsibility for inaccurate, incomplete or outdated information. Its contents are subject to change without notice.

PULSONIC
48, rue de Versailles 91400 Orsay France
Tel : +33 1 64 46 34 10 | Fax : +33 1 64 46 25 22
Email : info@pulsonic.com | www.pulsonic.com
SAS with a capital of 70000€ | RCS : Evry B 329 221 980

Item : 003378

Fuse holder

General

Dimensions (L x l x h)	5 x 1x 9 cm
Color	Grey

Technical specifications

Fuse holder current in amperes	25 A
Fuse	10 A

Power supply 230VAC / 6VAC+DC

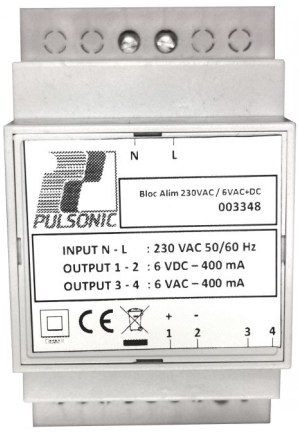

Item : 003348

General

Input	230 VAC
Number of outputs	2
Output 1-2	6 VDC—400 mA
Output 3-4	6 VAC—400 mA
Electrical isolation	4 kV
Dimensions	65.2(h)x89.4(l)x53.4(w)mm

Differential switch

Technical specifications

Input	230 V
Assigned current	40 A
Type of current	AC
Number of poles	2
Rated insulation voltage	250V
Tension assignée de tenue aux chocs	4000V
Rated differential breaking capacity	630A
Rated operating differential current	30mA
Trigger mode	Differential current
Grid distance	55mm

Environment

Operating temperature	-5 to 50°C
Protection class	IP20

WWW.PULSONIC.COM

Copyright © Jun-23 PULSONIC
This document is intended to be as accurate as possible. However, PULSONIC accepts no responsibility for inaccurate, incomplete or outdated information. Its contents are subject to change without notice.

PULSONIC
48, rue de Versailles 91400 Orsay France
Tel : +33 1 64 46 34 10 | Fax : +33 1 64 46 25 22
Email : info@pulsonic.com | www.pulsonic.com
SAS with a capital of 70000€ | RCS : Evry B 329 221 980

Solar panel 10W

General

Designation	KS10T
Technology	Polycrystalline Silicon
Efficiency	> 14 %

Electrical characteristics

Nominal power	10 Wc
Voltage @ nominal power	17,4 V
Current @nominal power	0,58 A
Open-circuit Voltage	21,7 V
Open-circuit current	0,62 A

Physical characteristics

Length	287 mm
Width	352 mm
Depth	22 mm
Weight	1,36 Kg

Materials

Cells	Silicium polycristallin
Encapsulation	Tempered glass, EVA resin
Protection	Climate protection film TPT
Structure	Aluminium

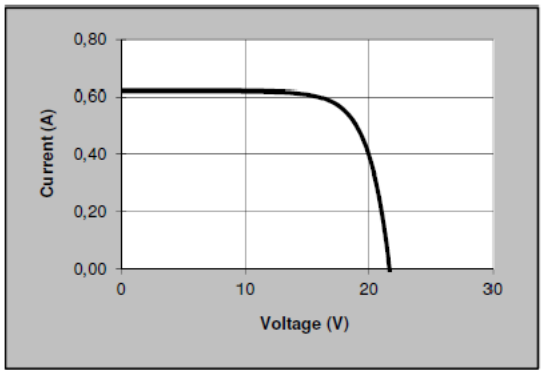

Les valeurs électriques sont données en conditions STC : 1kW/m², spectre solaire AM 1.2, termpérature 25°C.
Puissance minimale = Puissance nominale – 10%.

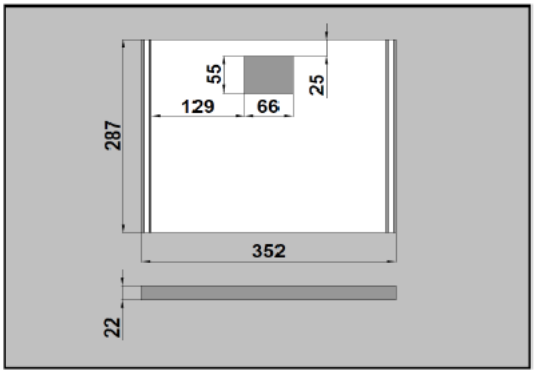

Toutes les dimensions sont en mms.

WWW.PULSONIC.COM

PULSONIC
48, rue de Versailles 91400 Orsay France
Tel : +33 1 64 46 34 10 | Fax : +33 1 64 46 25 22
Email : info@pulsonic.com | www.pulsonic.com
SAS with a capital of 70000€ | RCS : Evry B 329 221 980

Copyright © Jun-23 PULSONIC
This document is intended to be as accurate as possible. However, PULSONIC accepts no responsibility for inaccurate, incomplete or outdated information. Its contents are subject to change without notice.

Double electrical cabinet

General

General	Waterproof enclosure
Fastening system	Metal clamp
Function	Empty box
Color	Beige

Environment

Protection class	IP66
IK resistance index	IK10

Technical characteristics

Composition	Empty box with ground terminal
Material	Steel
Dimensions(height.xwidth.xlength.)	600 x 400 x 300 mm
Dimensions of inner box	300 x 300 x 210 mm
Thickness (door and box)	1,2 mm
Thickness of mounting plate	1,5 mm

Interfaces

3 Cable glands	M16
1 Cable gland	M20

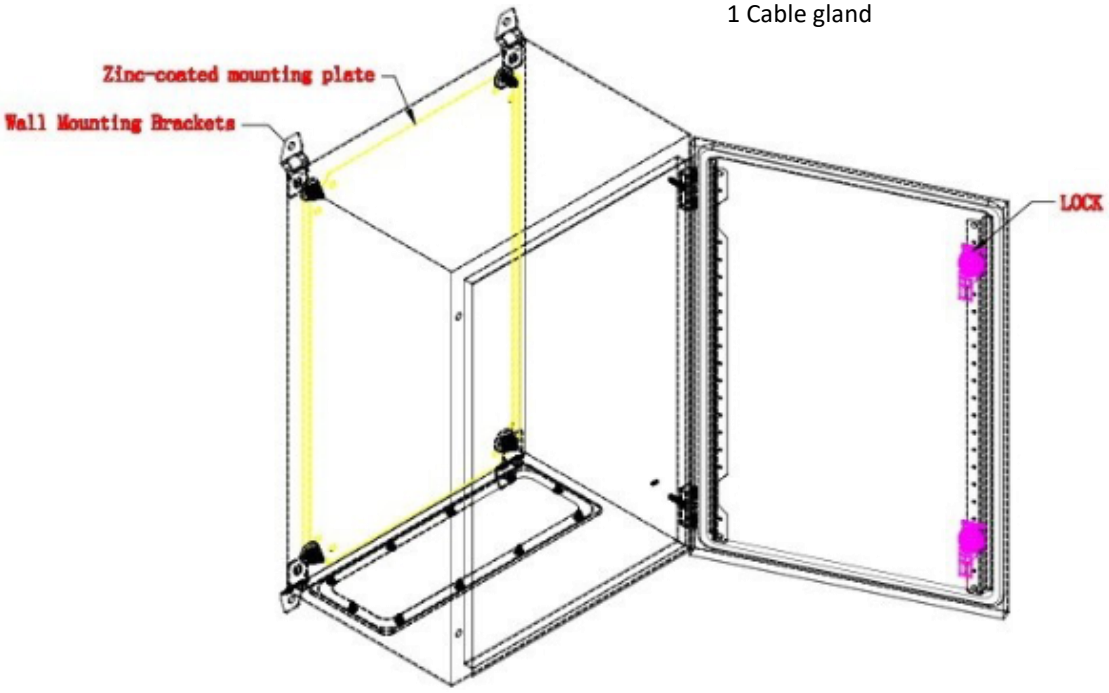

Metal collar for fixing the box to the PULSIA structure

Copyright © Jun-23 PULSONIC
This document is intended to be as accurate as possible. However, PULSONIC accepts no responsibility for inaccurate, incomplete or outdated information. Its contents are subject to change without notice.

PULSONIC
48, rue de Versailles 91400 Orsay France
Tel : +33 1 64 46 34 10 | Fax : +33 1 64 46 25 22
Email : info@pulsonic.com | www.pulsonic.com
SAS with a capital of 70000€ | RCS : Evry B 329 221 980